PART NUMBER
68554-67
68569-67
ORIG. 7-66

INSTRUCTIONS

HARLEY-DAVIDSON
GENUINE PARTS AND ACCESSORIES

DIRECTION SIGNAL LAMPS - SPORTSTER

ITEM	DESCRIPTION
1.	Switch and Cable Assembly (1): Switch installed on right handlebar.
2.	Switch Clamp (2): To attach switch to handlebar.
3.	Screw, No. 8-32 x 5/16 (2): Used to fasten handlebar switch clamps.
4.	Nut, No. 8-32 (2): Used with Item 3 on switch clamps.
5.	Spring Clips (2): To attach switch cable in position along handlebar.
6.	Rear Lamp Cable (1) (has red & green wires): To connect rear lamps to front fork terminal board.
7.	Spring Clip (1): To secure switch cable to frame head.
8.	Grommet (1): For wires passing through rear hole in rear fender.
9.	Conduit, 5/16 I. D. x 10-3/4 in. long (1): To protect rear lamp cable beneath rear fender.
10.	Rear Lamp Mount Bracket (1): To mount rear lamps.
11.	Rear Lamps (Red Lens) (2): Installed on rear bracket, Item 10.
12.	O-ring (4): Used with front and rear lamps.
13.	Screw, No. 10-24 x 3/8 Phillips hd. (4): Used to mount front lamps to brackets.
14.	Lockwasher, No. 10 (8): Used with Item 13.
15.	Bolt, 1/4-20 x 1/2 hex (2): to mount rear bracket to fender.
16.	Lockwasher, 1/4 ext. tooth (2): Used with Item 15.
17.	Conduit, 1/4 I. D. x 2-1/2 in. lg. (2): Used to insulate connection between rear lamps and rear lamp cable.
18.	Front Lamp Mounting Bracket (2): To Attach front lamps to fork sides.
19.	Front Lamps (Amber Lens) (2): Installed on front mounting brackets, Item 18.
20.	Washer, No. 10 (4): Used with Item 14 on front lamps.
21.	Cap Screw, 5/16-24 x 9/16 hex (2): Used to attach front brackets to fork sides.
22.	Washer, 5/16 (2): Used with Item 21.
23.	Flasher Mounting Bracket (1): Used to mount flasher, Item 26.
24.	Screw, No. 10-32 x 3/8 (1): Used to mount Flasher bracket to headlamp bracket.
25.	Screw, No. 10-32 x 1/4 rd. hd. (1): Used to mount flasher clip to bracket.
26.	Flasher, (1): Installed in bracket (Item 23).
27.	Flasher Mounting Clip (1): Used to mount Item 23.
28.	Nut, No. 10-32 (2): Used with Items 24 and 25.

ITEM	DESCRIPTION	ITEM	DESCRIPTION
29.	Flasher Wire, RED (1): For flasher terminal "X".	31.	Screw, No. 4-24 x 1/4 self-tapping (2): To attach wires to flasher terminals
30.	Flasher Wire, YELLOW (1): For flasher terminal "L".	32.	Pilot lamp bulb (2): Install in headlamp housing signal light sockets.

33. Screw, No. 10-24 x 3/8 socket hd. (4): To mount rear lamps to brackets.

Disconnect Battery Ground Cable

Remove headlamp housing. If motorcycle is equipped with windshield, it must be removed at fork side cap screws before removing the trim panels or housing. As items are removed, attach spot-lamps, if any, to fork sides with screws so that lamps will not scratch fender or put undue strain on wires.

Installing Switch and Cable Assembly

Install the direction lamp switch (Item 1) in downward position on right handlebar as close to handlebar grip as possible. Clamps, screws and nuts (Items 2, 3 and 4) will be found in kit. Install so that clamp screws will be on outer side of handlebar. Lead cable along handlebar nearly to handlebar clamp, then downward along right side of frame head to terminal plate. Secure cable along handlebar with two small spring clips (Item 5). Wires will be connected later.

Installing Rear Direction Lamp Cable

Remove gasoline tank rear bolt and spacers. Using a piece of soft iron wire (Not furnished in kit), insert one end between rear of gas tank bracket and frame. Push forward across top of engine and past left side of frame steering head. Hook rear end of wire through the eye terminals of rear lamp cable (Item 6) and pull cable forward between tank and frame tube until it is about six inches past left side of frame head. Attach cable to steering head with large spring clip (Item 7).

Remove rear wheel as follows: Locate and remove rear chain connecting link and disengage chain from rear sprocket. Remove brake adjusting nut from brake rod. Remove axle nut, lockwasher and centering collar. With a soft hammer, tap right end of axle to loosen it in left side of frame. Lay motorcycle on its right side to rest on front safety guard. Remove rear axle by pulling it out of hub and frame assembly. Remove axle spacer from left side. Slide wheel and brake assembly to extreme rear end of frame. Lift wheel up to pass outer surface of brake drum over brake shoes and remove wheel.

Starting with the fourth clip back from the front, pry out open ends of clips on wire channel on bottom side of fender about 1/8 in. Remove tail and stop lamp cable from clips. Remove tail lamp mounting screws, nuts and washers. Move tail lamp housing away from mounting holes in fender, securing it in place with tape or wire. Use the template printed on the last page of these instructions to locate, center punch and drill the three additional holes indicated. Cut out tem-plate and locate on tail lamp mounting holes and contour of tail lamp cutout. Remove burrs from holes and install grommet (Item 8) in proper hole. See Figure 1 for location of hole at front of fender. Use a blunt tool, such as a punch, to shape hole for easier passage of cable.

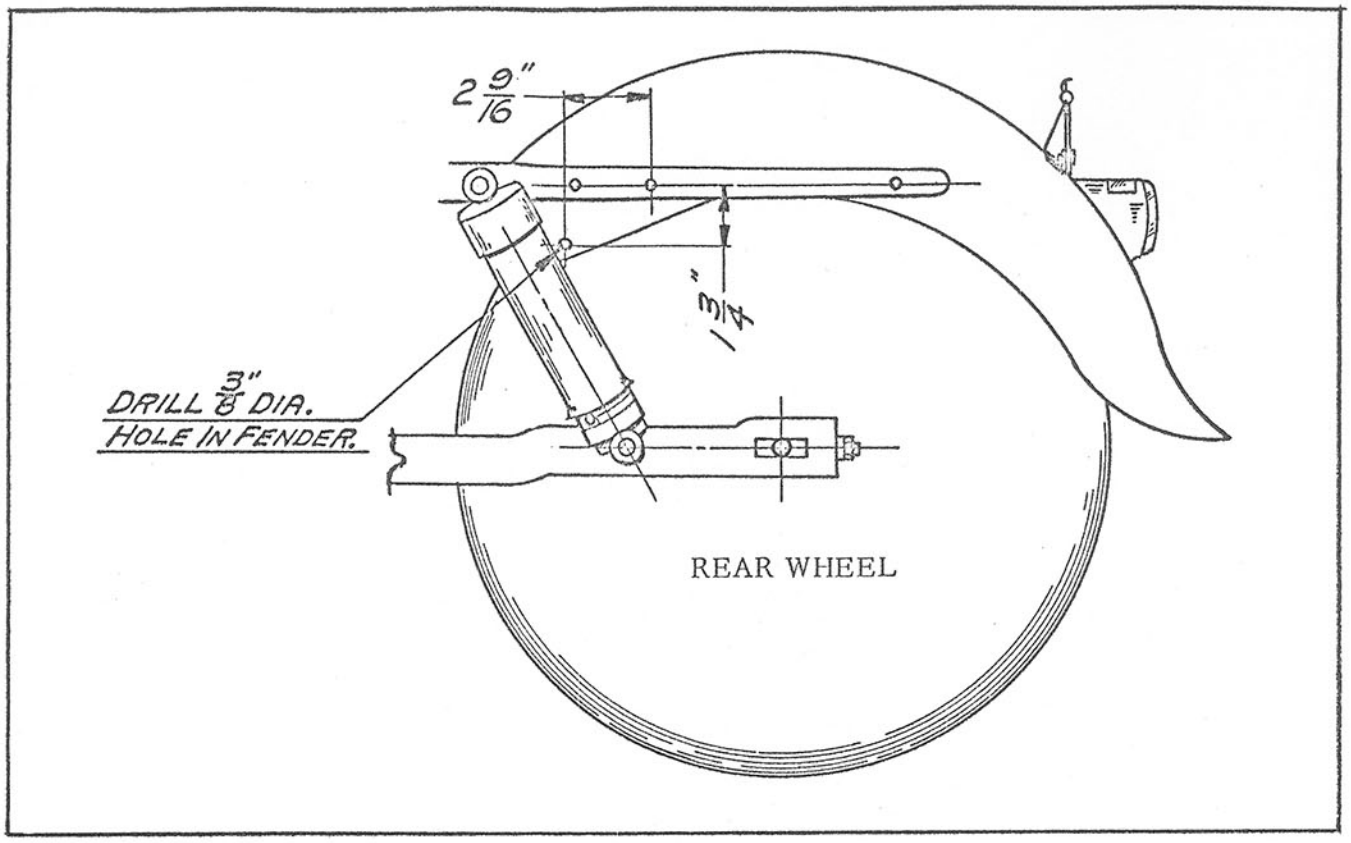

FIGURE 1

Route rear end of cable from rear of gas tank below seat cluster forging and through front hole in fender. Route wires into channel clips starting with fourth clip from front. Install cable protection conduit (Item 9) on the wires after the last clip. Route wires through clip on fender reinforcement, through grommet to top side of fender. Adjust wires so that about 7-1/2 in. of each wire extends past grommet. Reinstall tail and stop lamp cable and tap down clips. Adjust cable conduit to extend through hole at front of fender about 1 in. Reinstall gas tank mounting bolts and spacers.

Installing Rear Lamps (Red Lens)

Install rear lamps (Item 11) on rear lamp bracket (Item 10) as follows: Place o-ring (Item 12) over lamp wire and thread wire through large center hole in side wall of bracket. Secure lamps with socket-head screws (Item 33) and lockwashers (Item 14). Attach the bracket to the fender using bolts and external tooth lockwashers (Item 15 and 16). After adjusting position and tightening direction lamp bracket securely to fender, adjust tail lamp and tighten tail lamp mounting nuts beneath fender.

From the grommet, route the RED wire along top of fender toward LEFT lamp and GREEN wire beneath lamp bracket toward RIGHT lamp. Slip a 2-1/2 in. length of conduit (Item 17) over each lamp wire. Connect lamp wires to cable wires by operating mating terminals scissors-fashion Slide the conduit toward lamps as far as possible to cover connections and fold excess wire into space in rear of lamp bracket.

Installing Front Lamps (Amber Lens)

Front lamp brackets (Item 18) will be attached to fork sides at lower windshield mounting bolts, between windshield bracket and fork. Brackets are to project forward and downward. Front lamps (Item 19) will be installed on brackets as follows: Place o-ring (Item 12) over lamp wire and against lamp base. Thread wire through large hole in bracket. Attach lamps to brackets using Phillips head screws, lockwashers and washers (Items 13, 14 and 20). Slip lockwashers onto screws first,

then plain washers and insert through curved, slotted holes. Brackets will be attached to fork sides after wiring connections are made.

Attach flasher (Item 26) to headlamp bracket as shown in Figure 2. Attach flasher mounting clip (Item 27) with screw and nut (Items 24 and 28). Attach flasher bracket (Item 23) to clip with screw (Item 25) and remaining nut (Item 28).

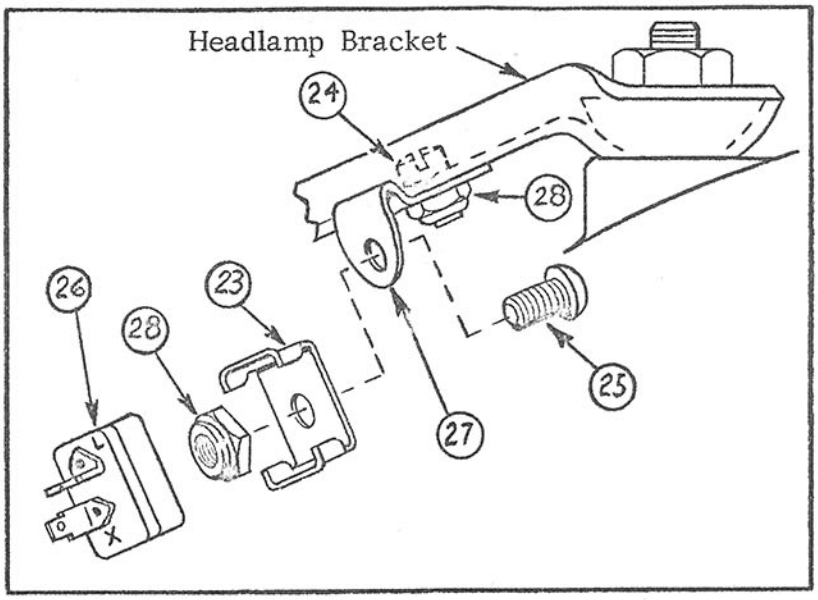

FIGURE 2

Wiring Connections (See Figure 3)

Connect RED flasher wire from kit (Item 29) to flasher terminal "X" and YELLOW flasher wire (Item 30) to flasher terminal "L", using self-tapping screws (Item 31).

Route wire from left front lamp to terminal board. Connect this wire, RED wire from rear lamp cable and RED wire from switch cable to terminal No. 23. Connect RED flasher wire to terminal No. 28. Connect YELLOW flasher wire and GREEN wire from handlebar switch to terminal No. 27. Route wire from right front lamp to terminal board. Connect this wire, GREEN wire from rear lamp cable and BLACK wire from handlebar switch to terminal No. 12.

Push flasher (Item 26) into flasher bracket so it snaps firmly into place. Install pilot lamp bulbs (Item 32) in the two forward sockets of indicator lamp bracket. Install headlamp housing, windshield and front lamps. Discard Phillips head bolts in fork sides and substitute the hex head caps screws and washers from kit (Items 21 and 22).

Connect battery ground cable.

CAUTION — When making direction lamp wiring connections, observe closely to be sure that all wire terminals have ample clearance from any possible "ground", because a dead short to ground anywhere in the direction lamp circuit will burn out flasher immediately, when lights are turned on.

OPERATION

Turn ignition switch to ignition position and operate direction lamp switch to be sure all connections are correct. When handlebar switch button is in center (off) position, no lights should flash. When button is moved clockwise from center, the left front and left rear direction lamps and left pilot lamp should flash. When switch button is moved counterclockwise from center position, the right front and right rear direction lamps and right pilot lamp should flash.

Harley-Davidson, Inc. has given us permission to provide this document on our website for the sole purpose of helping us restore our motorcycles.

Harley-Davidson, Inc. retains copyright over these materials, and NO reproduction or other use of these materials is permitted without prior authorization from Harley-Davidson, Inc.

The **O**ld **S**portster and **K**-model **R**esearch **G**roup (OSKRG) is a group of individuals who have spent years researching the minute differences in the parts, fit, finish, and configuration of the Harley-Davidson 1952-1956 K-Models, and (early) 1957-1969 Sportster models.

The results of our research is published on our website
www.harleyKmodel.com